CITY OF TAMPA

RIVERGATE PARKING FACILITY B1 REPAIRS 2014

TAMPA, FLORIDA

WALKER Project No.: 15-2011.01

SHEET INDEX

RESTORATION

G-001	COVER SHEET
R-001	GENERAL NOTES & WORK ITEM SCHEDULE
R-100	LEVEL B1 PLAN
R-501	REPAIR DETAILS
R-502	REPAIR PHOTOS (1)
R-503	REPAIR PHOTOS (2)

LOCATION MAP

N.T.S.

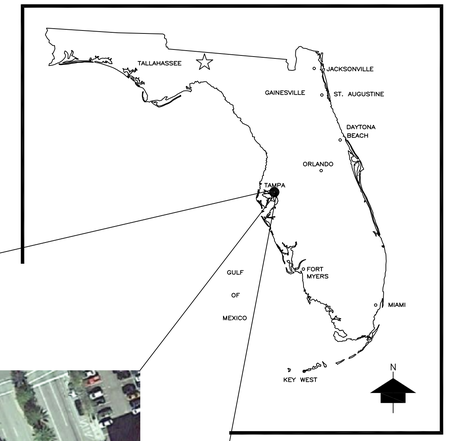

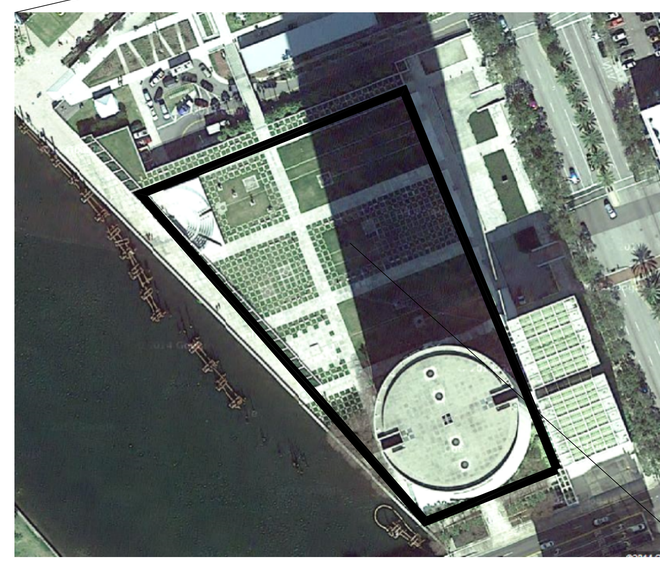

RIVERGATE PARKING FACILITY
400 N ASHLEY DR, TAMPA, FL
33602

AREA MAP

NORTH

WALKER
RESTORATION CONSULTANTS
4904 Eisenhower Blvd,
Suite 150
Tampa, FL 33634
813.888.5800 Ph
813.888.5822 Fax
BE-0003840
www.walkerrestoration.com

TO THE BEST OF THE ENGINEER'S KNOWLEDGE, THE PLANS AND SPECIFICATIONS COMPLY WITH THE APPLICABLE MINIMUM BUILDING CODES AND THE APPLICABLE FIRE SAFETY STANDARD

CITY OF TAMPA
RIVERGATE PARKING FACILITY LEVEL B1
REPAIRS 2014
TAMPA FLORIDA

NO.	DATE	DESCRIPTION
ISSUED:		

PROJECT NO:	15-2011.01
DRAWN BY:	MLC
CHECKED BY:	BKP
SHEET TITLE:	COVER SHEET

08-13-14 ISSUED FOR OWNER'S REVIEW

G-001

Copyright 2014. All rights reserved. No part of this document may be reproduced in any form or by any means without permission from Walker Parking Consultants/Engineers, Inc.

Plot Date: Aug 13, 2014 - 1:42pm - GJUI, MJUI, KIUJ.dwg

GENERAL NOTES

A. CONSTRUCTION
1. CONSTRUCTION SHALL BE IN ACCORDANCE WITH ALL APPLICABLE FEDERAL, STATE OF FLORIDA AND CITY OF TAMPA CODES AND ORDINANCES, INCLUDING FIRE CODES.
2. ALL MATERIAL PROPERTIES SHALL BE AS NOTED IN SPECIFICATIONS.
3. PRIOR TO FABRICATION OF ANY MATERIAL OR PLACEMENT OF CONCRETE, FIELD VERIFY ALL EXISTING DIMENSIONS AND CONDITIONS SHOWN ON DRAWINGS. REPORT ALL DISCREPANCIES TO THE ENGINEER IMMEDIATELY.
4. DO NOT SCALE DRAWINGS.

B. CONSTRUCTION DOCUMENTS
1. CONSTRUCTION DOCUMENTS ENTITLED "RIVERGATE PARKING FACILITY LEVEL B1 REPAIRS 2014" INCLUDES THESE DRAWINGS AND SEPARATELY BOUND SPECIFICATIONS. FOR PURPOSES OF PERFORMING THE WORK, DRAWINGS AND SPECIFICATIONS SHALL BE A SINGLE UNIT.
2. DIMENSIONS SHOWN ON PLANS ARE BASED ON ORIGINAL CONSTRUCTION DOCUMENTS. THE CONTRACTOR IS REQUIRED TO FIELD VERIFY ALL CONDITIONS FOR THE PURPOSE OF PREPARING THE BID AND PERFORMING THE WORK.
3. REFER TO SPECIFICATION SECTION 02000 FOR SCOPE, DESCRIPTION AND REQUIREMENTS OF WORK.

C. DETAILS AND SYMBOLS
1. ALL CAST-IN-PLACE REPAIR DETAILS ARE SHOWN ON DRAWING SERIES R-501
2. DETAILS WITH A LAST DIGIT OTHER THAN 0 OR 0A AND LABELED (FOR CLARIFICATION ONLY) DO NOT REPRESENT A SEPARATE PRICE ITEM. THESE DETAILS SUPPLEMENT THE BASIC DETAIL TO PROVIDE ADDITIONAL INFORMATION. IN SOME CASES THESE DETAILS SHOW VARIATION OF THE TYPICAL CONDITION.
3. WHERE THE WORK ITEM BUBBLE IS NOTED "TYP" IT MEANS THE WORK ITEM OCCURS AT ALL LOCATIONS WHERE THE APPLICABLE DETERIORATION OR DESIGNATION SYMBOL OCCURS ON THAT PLAN.
4. WHERE "TAR" IS NOTED, IT MEANS THERE MAY BE AREAS OF THIS WORK IN ADDITION TO THE PARTICULAR DESIGNATED AREAS.
5. WHERE TWO OR MORE WORK ITEM BUBBLES ARE GROUPED TOGETHER, IT MEANS ANY OR ALL OF THE DESIGNATED WORK ITEMS MAY BE APPLICABLE. COORDINATION OF WORK ITEMS IS CONTRACTOR'S RESPONSIBILITY.
6. WHEN A WORK ITEM OR DETAIL IS LISTED AS INCIDENTAL, THAT WORK IS INCLUDED IN THE PAY UNIT OF OTHER WORK ITEMS AND DOES NOT HAVE A SEPARATE PRICE.
7. WHEN A DETAIL IS LABELED (FOR REFERENCE ONLY) IT PROVIDES INFORMATION ONLY ABOUT INCIDENTAL WORK AND DOES NOT HAVE A PAY UNIT.
8. CONTRACTOR IS RESPONSIBLE FOR DETERMINING ACTUAL EXTENT AND LOCATIONS OF REPAIR AREAS IN ACCORDANCE WITH THE SPECIFICATIONS, WORK ITEM IS SHOWN ONLY TO REPRESENT THE TYPES OF DETERIORATION.
9. SEE WORK ITEM SPECIFICATION FOR SPECIFIC INFORMATION REGARDING DETAILS.

D. EXISTING SERVICES AND UTILITIES
1. CONTRACTOR SHALL REVIEW ALL EXISTING CONDITIONS TO DETERMINE ALL ELECTRICAL AND MECHANICAL SERVICES AND UTILITIES AFFECTED BY THE REPAIR WORK. MAKE NECESSARY TEMPOARY CONNECTIONS TO MAINTAIN EXISTING SERVICES TO ALL AREAS OF THE PARKING GARAGE OR OTHER AREAS (NOT IN CONTRACT) AFFECTED BY THE WORK. THE CONTRACTOR SHALL SUBMIT THE METHODS AND SCHEDULE OF CONNECTIONS FOR THE OWNER'S APPROVAL PRIOR TO COMMENCEMENT.

E. CONSTRUCTION PHASING, SEQUENCING AND TRAFFIC MAINTENANCE
1. WORK SEQUENCE SHALL BE COORDINATED WITH THE OWNERS REPRESENATIVE AND GARAGE OPERATOR.
2. OWNER WILL CONTINUE TO USE GARAGE DURING REHABILITATION. CONTRACTOR MUST PHASE AND ARRANGE WORK SO AS TO MAINTAIN ACCESS AT ALL TIMES TO ALL PARKING AREAS THAT ARE NOT UNDER CONSTRUCTION FOR BOTH VEHICLES AND PEDESTRIANS.

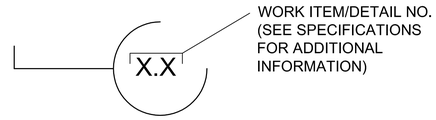

ALL WORK ITEM DETAILS ARE SHOWN ON SHEETS R-5XX SERIES.

WORK ITEM / DETAIL IDENTIFICATION

(NOT ALL DETAILS HAVE DETAILS, REFER TO SECTION 020010 FOR DETAILED DESCRIPTIONS OF ALL WORK ITEM SCOPE, MATERIALS, EXECUTIONS, MEASUREMENT & PAYMENT)

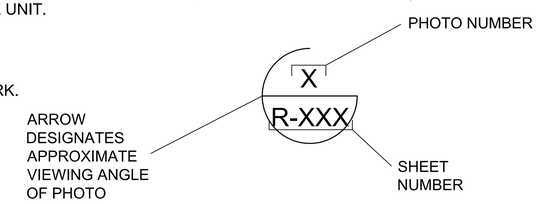

PHOTO IDENTIFICATION

(PHOTOS ARE PROVIDED TO CLARIFY TYPICAL OR NON-STANDARD CLARIFY ELEMENT OF WORK ITEMS)

ABBREVIATIONS

APPROX	=	APPROXIMATELY
BM	=	BEAM
BOT	=	BOTTOM
CIP	=	CAST IN PLACE
CJ	=	CONSTRUCTION JOINT/CONTROL JOINT
CLR	=	CLEARANCE
COL	=	COLUMN
CONC	=	CONCRETE
DET	=	DETAIL
EA	=	EACH
EJ	=	EXPANSION JOINT
EXIST	=	EXISTING
FL	=	FLOOR
INC	=	INCIDENTAL
LF	=	LINEAR FOOT
LS	=	LUMP SUM
MAX	=	MAXIMUM
MIN	=	MINIMUM
N/A	=	NOT APPLICABLE
OC	=	ON CENTER
OH	=	OPPOSITE HAND
REINF	=	REINFORCEMENT
REQ'D	=	REQUIRED
SF	=	SQUARE FOOT
SIM	=	SIMILAR
SOG	=	SLAB ON GRADE
SPEC	=	SPECIFICATION
SUPT	=	SUPPORTED
TAR	=	TYPICAL AS REQUIRED
TYP	=	TYPICAL
UNO	=	UNLESS NOTED OTHERWISE
W.I.	=	WORK ITEM
WWF	=	WELDED WIRE FABRIC

WORK ITEM	DESCRIPTION	UNITS	QUANTITY
PART I: GENERAL REQUIREMENTS			
1.0	**GENERAL REQUIREMENTS**		
1.1	Project Mobilization	L.S.	1
1.2	Concrete Formwork	Incidental	
1.4	Concrete Reinforcement	Incidental	
1.5	Temporary Signage	Incidental	
PART II: CONCRETE FLOOR / CEILING SURFACES			
3.0	**CONCRETE FLOOR REPAIR**		
3.1	Floor Repair - Partial Depth	S.F.	20
PART III: STRUCTURAL CONCRETE FRAME REPAIRS			
6.0	**CONCRETE COLUMN REPAIR**		
6.1	Column Repair - Partial Depth	S.F.	6
7.0	**CONCRETE WALL REPAIR**		
7.1	Wall Repair - Partial Depth	S.F.	5
PART IV: CRACKS AND JOINTS			
9.0	**EXPANSION JOINT EDGE PREPARATION**		
9.1	Exp Joint Preparation - New Blockout	L.F.	120
10.0	**EXPANSION JOINT REPAIR AND REPLACEMENT**		
10.3	Expansion Joint - Elastomeric Concrete Edged	L.F.	120
10.6	Expansion Joint - Silicone Seal	L.F.	250
10.7	Vertical Expansion Joint - Silicone Seal	L.F.	390
11.0	**CRACK AND JOINT REPAIR**		
11.1	Rout and Seal Cracks and Joints	L.F.	200
PART VI: POST-TENSIONING SYSTEMS			
21.0	**P/T SYSTEM REPAIR - MONOSTRAND**		
21.2	Protect Exposed P/T Tendon(s)	L.F.	10
PART VII: MECHANICAL / ELECTRICAL SYSTEMS			
25.0	**MECHANICAL - DRAINAGE**		
25.7	Repair Insulation on Piping Inside Stairs	L.F.	20

WALKER
RESTORATION CONSULTANTS
4904 Eisenhower Blvd, Suite 150
Tampa, FL 33634
813.888.5800 Ph
813.888.5822 Fax
BE-0003840
www.walkerrestoration.com

TO THE BEST OF THE ENGINEER'S KNOWLEDGE, THE PLANS AND SPECIFICATIONS COMPLY WITH THE APPLICABLE MINIMUM BUILDING CODES AND THE APPLICABLE FIRE SAFETY STANDARD

CITY OF TAMPA
RIVERGATE PARKING FACILITY LEVEL B1
REPAIRS 2014
TAMPA FLORIDA

08-13-14 ISSUED FOR OWNER'S REVIEW

NO.	DATE	DESCRIPTION
ISSUED:		

PROJECT NO: 15-2011.01
DRAWN BY: MLC
CHECKED BY: BKP
SHEET TITLE:
GENERAL NOTES AND WORK ITEM SCHEDULE

R-001

Copyright 2014. All rights reserved. No part of this document may be reproduced in any form or by any means without permission from Walker Parking Consultants/Engineers, Inc.

Plot Date: Aug 13, 2014 - 1:43pm - GUUI, KUUI, KIUU.dwg

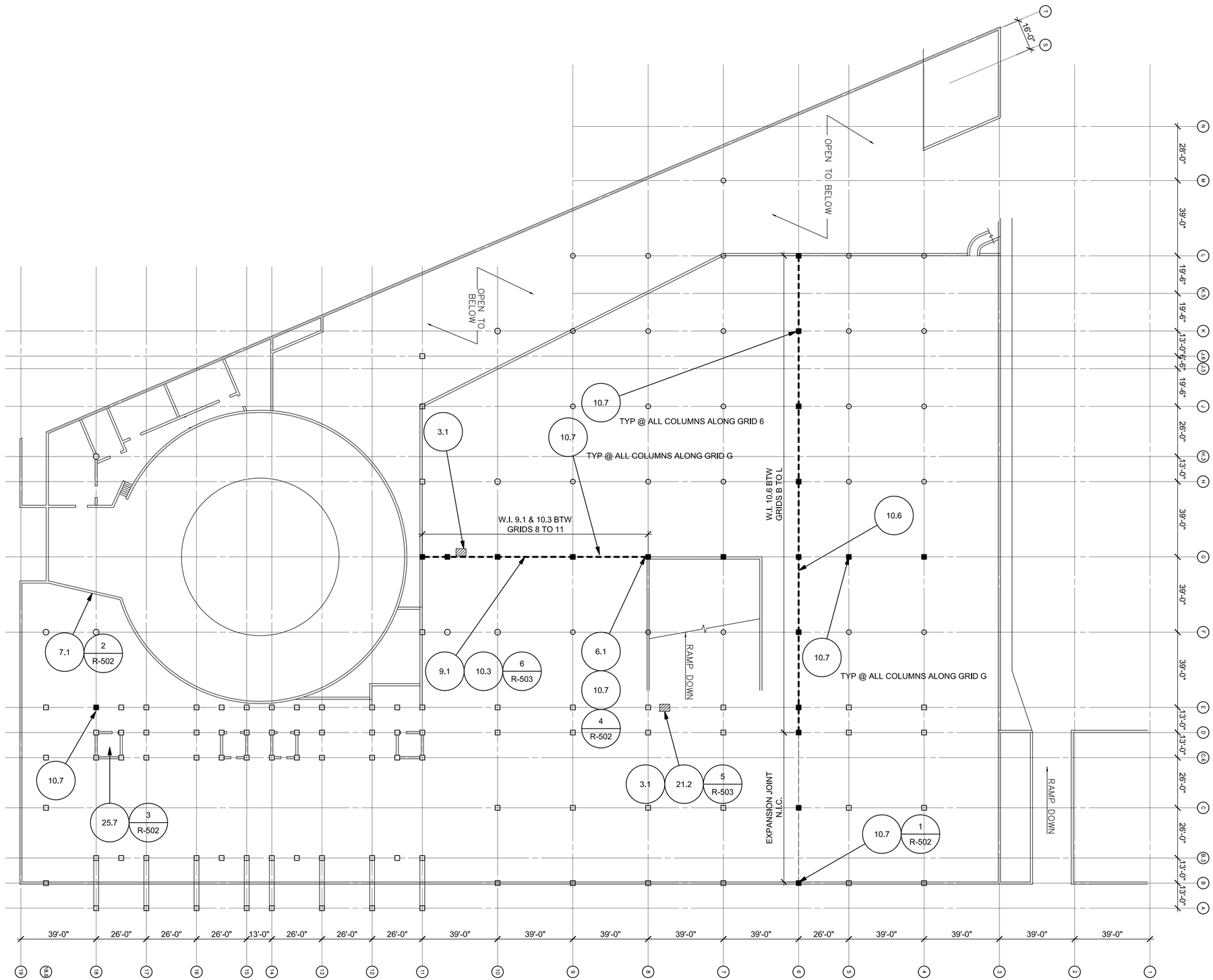

1 LEVEL B1 RIVERGATE PARKING FACILITY

GENERAL LEGEND

- EXPANSION JOINT (E.J.)
- FLOOR SPALL OR DELAMINATION
- COLUMN LOCATIONS WHERE W.I. 11.3 IS REQUIRED

WALKER
RESTORATION CONSULTANTS
4904 Eisenhower Blvd,
Suite 150
Tampa, FL 33634
813.888.5800 Ph
813.888.5822 Fax
BE-0003840
www.walkerrestoration.com

TO THE BEST OF THE ENGINEER'S KNOWLEDGE, THE PLANS AND SPECIFICATIONS COMPLY WITH THE APPLICABLE MINIMUM BUILDING CODES AND THE APPLICABLE FIRE SAFETY STANDARD

CITY OF TAMPA
RIVERGATE PARKING FACILITY LEVEL B1
REPAIRS 2014
TAMPA FLORIDA

NO.	DATE	DESCRIPTION
ISSUED:		

PROJECT NO:	15-2011.01
DRAWN BY:	MLC
CHECKED BY:	BKP
SHEET TITLE:	

LEVEL B1 PLAN

08-13-14 ISSUED FOR OWNER'S REVIEW

R-100

Copyright 2014. All rights reserved. No part of this document may be reproduced in any form or by any means without permission from Walker Parking Consultants/Engineers, Inc.

Plot Date: Aug 13, 2014 - 1:43pm - GUU1, KUU1, K1UU.dwg

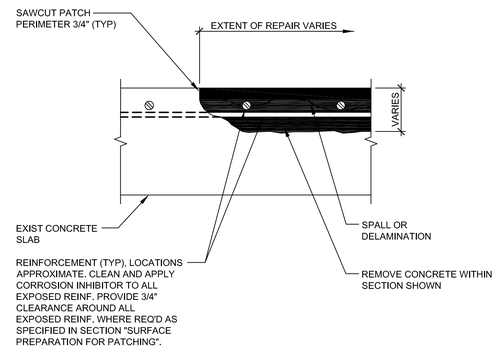

3.1 FLOOR REPAIR - PARTIAL DEPTH

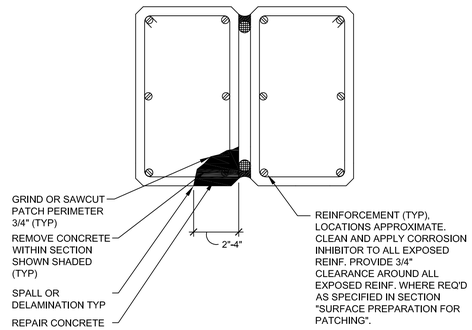

NOTES:
1. COLUMN TIES WHICH HAVE LOST MORE THAN 15% OF ORIGINAL CROSS ECTIONAL AREA SHALL BE SUPPLEMENTED AS ENGINEER DIRECTS.
2. NUMBER AND LOCATION OF REINFORCEMENT SHOWN MAY DIFFER FROM ACTUAL FIELD CONDITIONS.

6.1 COLUMN REPAIR-PARTIAL DEPTH

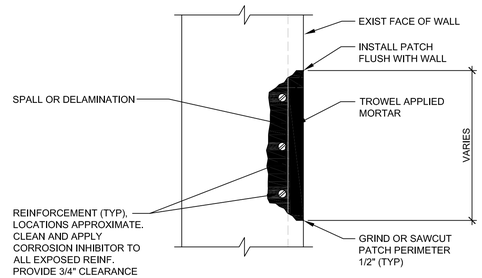

7.1 WALL REPAIR-PARTIAL DEPTH

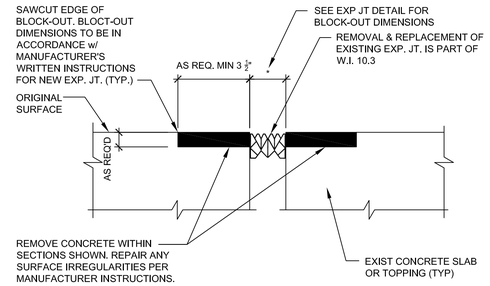

NOTES:
1. MAINTAIN EXPANSION JOINT OPENING CLEAR OF DEBRIS. VERTICAL SURFACE MUST BE PLUMB AND SHALL NOT VARY MORE THAN 1/8" IN 6".
2. EDGE STRAIGHTNESS TOLERANCE SHALL NOT VARY MORE THAN 1/4" IN 20'-0"
3. CONTRACTOR TO COORDINATE CLOSURE OF PARKING SPACES BELOW EXP. JT. w/ OWNER.

9.1 EXPANSION JOINT PREPARATION-NEW BLOCKOUT

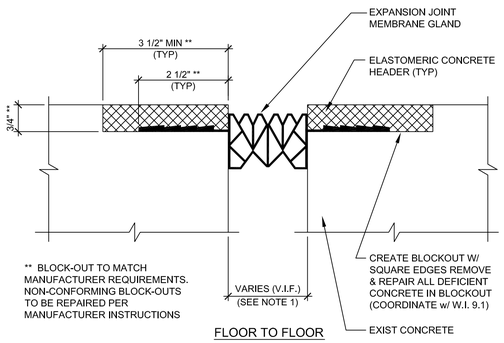

NOTE:
1. CONTRACTOR SHALL, WITH MANUFACTURER, VERIFY FIELD INSTALLATION WIDTH BASED ON TEMPERATURE CONDITIONS.
2. PROVIDE SHOP DRAWINGS SHOWING JOINT INTERSECTIONS AND WALL TERMINATIONS.
3. CONTRACTOR TO COORDINATE CLOSURE OF PARKING SPACES BELOW EXP. JT. w/ OWNER.

10.3 EXPANSION JOINT-ELASTOMERIC CONCRETE EDGED

W.I. 10.3 6" = 1'-0" X-1030F1 JANUARY 2013

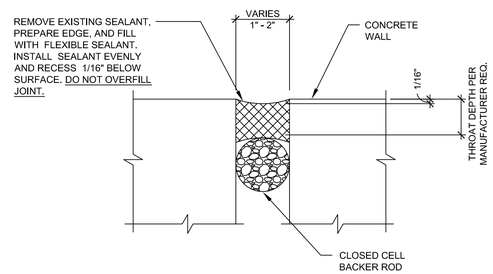

NOTES:
1. CONTRACTOR TO VERIFY EXISTING FIELD INSTALLATION WIDTH.

10.7 EXPANSION JOINT-SILICONE SEAL

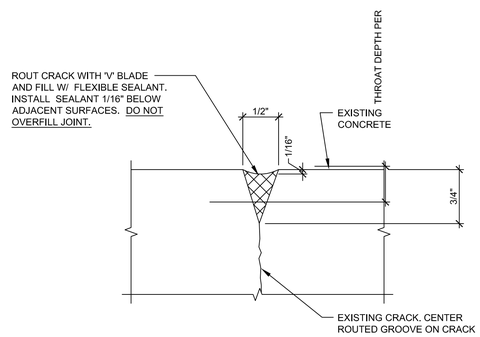

11.1 ROUT & SEAL RANDOM CRACKS (CRACKS 0.030" OR GREATER)

Copyright 2014. All rights reserved. No part of this document may be reproduced in any form or by any means without permission from Walker Parking Consultants/Engineers, Inc.

WALKER
RESTORATION CONSULTANTS
4904 Eisenhower Blvd,
Suite 150
Tampa, FL 33634
813.888.5800 Ph
813.888.5822 Fax
BE-0003840
www.walkerrestoration.com

TO THE BEST OF THE ENGINEER'S KNOWLEDGE, THE PLANS AND SPECIFICATIONS COMPLY WITH THE APPLICABLE MINIMUM BUILDING CODES AND THE APPLICABLE FIRE SAFETY STANDARD

CITY OF TAMPA
RIVERGATE PARKING FACILITY LEVEL B1
REPAIRS 2014
TAMPA FLORIDA

08-13-14 ISSUED FOR OWNER'S REVIEW

NO.	DATE	DESCRIPTION
ISSUED:		

PROJECT NO: 15-2011.01
DRAWN BY: MLC
CHECKED BY: BKP
SHEET TITLE:
REPAIR DETAILS

R-501

Plot Date: Aug 13, 2014 - 1:43pm - KDU1, KDU2, KDU3.dwg

1 VERTICAL EXPANSION JOINT DETERIORATION

2 WALL SPALL AT INTERIOR BEAM

3 INSULATION DAMAGE INSIDE STAIRS

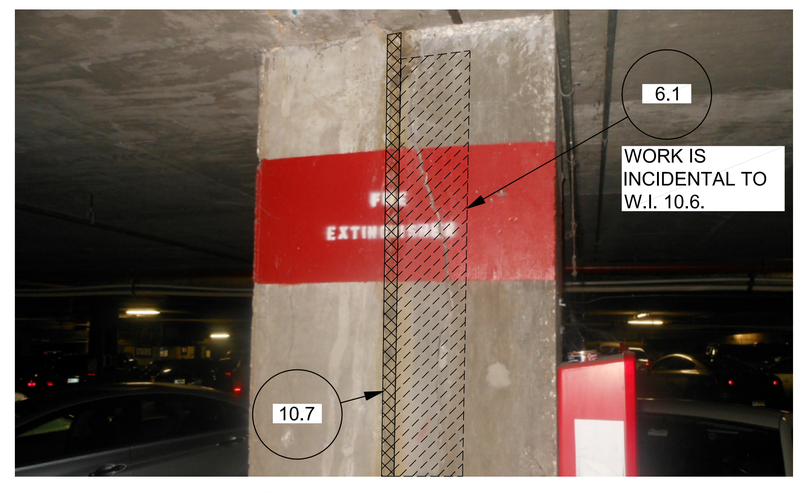

NOTE:
1. CONTRACTOR TO ENSURE COLUMN REPAIR DOES NOT PROTRUDE INTO EXPANSION JOINT.

4 TYPICAL DETERIORATION OF VERTICAL SEALANTS

WALKER
RESTORATION
CONSULTANTS
4904 Eisenhower Blvd,
Suite 150
Tampa, FL 33634
813.888.5800 Ph
813.888.5822 Fax
BE-0003840
www.walkerrestoration.com

TO THE BEST OF THE ENGINEER'S KNOWLEDGE, THE PLANS AND SPECIFICATIONS COMPLY WITH THE APPLICABLE MINIMUM BUILDING CODES AND THE APPLICABLE FIRE SAFETY STANDARD

CITY OF TAMPA
RIVERGATE PARKING FACILITY LEVEL B1
REPAIRS 2014
TAMPA FLORIDA

NO.	DATE	DESCRIPTION
ISSUED:		

08-13-14 ISSUED FOR OWNER'S REVIEW

PROJECT NO:	15-2011.01
DRAWN BY:	MLC
CHECKED BY:	BKP
SHEET TITLE:	REPAIR PHOTOS (1)

R-502

Copyright 2014. All rights reserved. No part of this document may be reproduced in any form or by any means without permission from Walker Parking Consultants/Engineers, Inc.

Plot Date: Aug 13, 2014 - 1:44pm - KOU1, KOU2, KOU3.dwg

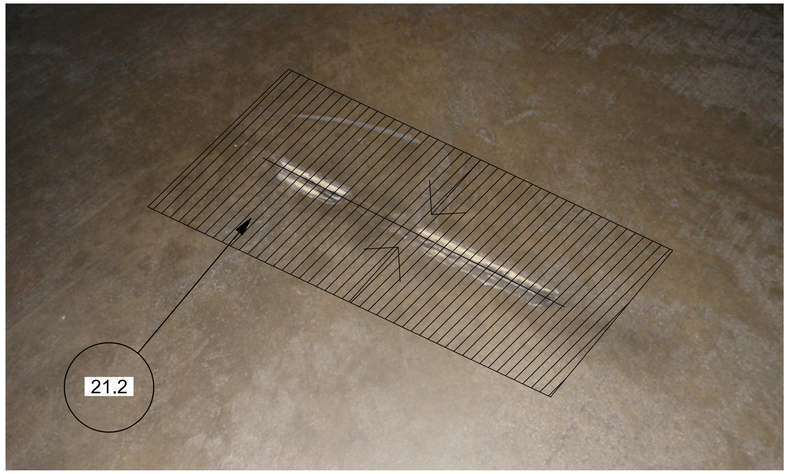

NOTE:
1. REMOVE CONCRETE 10" TO 12" TO EITHER SIDE OF EXPOSED PT STRAND. SLOPE REPAIR MORTAR TO PROVIDE ± 1" COVER OVER PT TENDONS.

5 PROTECT EXPOSED PT TENDON

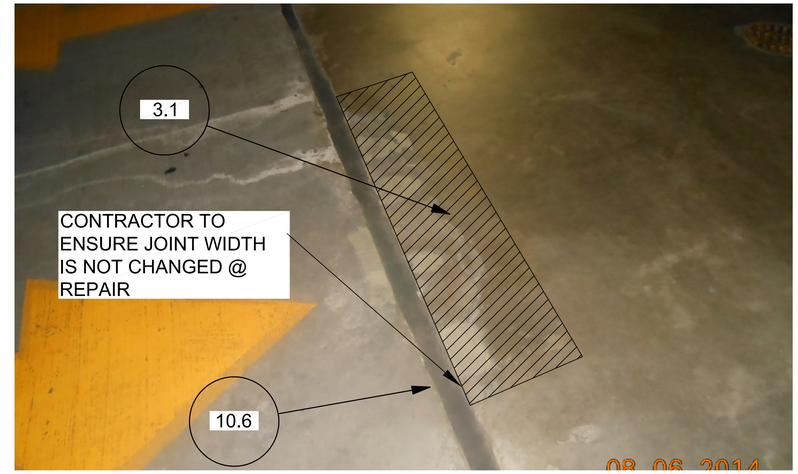

6 TYPICAL SILICONE EXPANSION JOINT DETERIOIRATION

WALKER
RESTORATION CONSULTANTS
4904 Eisenhower Blvd,
Suite 150
Tampa, FL 33634
813.888.5800 Ph
813.888.5822 Fax
BE-0003840
www.walkerrestoration.com

TO THE BEST OF THE ENGINEER'S KNOWLEDGE, THE PLANS AND SPECIFICATIONS COMPLY WITH THE APPLICABLE MINIMUM BUILDING CODES AND THE APPLICABLE FIRE SAFETY STANDARD

CITY OF TAMPA
RIVERGATE PARKING FACILITY LEVEL B1
REPAIRS 2014
TAMPA FLORIDA

08-13-14 ISSUED FOR OWNER'S REVIEW

ISSUED:	NO.	DATE	DESCRIPTION

PROJECT NO: 15-2011.01
DRAWN BY: MLC
CHECKED BY: BKP
SHEET TITLE:
REPAIR PHOTOS (2)

R-503

Copyright 2014. All rights reserved. No part of this document may be reproduced in any form or by any means without permission from Walker Parking Consultants/Engineers, Inc.

Plot Date: Aug 13, 2014 - 1:46pm - KOU1, KOU2, KOU3.dwg